COLORS®

AW Series Specification

AWT2013

Indoor | outdoor | IP68 | IK10 | FLAME RESISTANT | SALTWATER RESISTANT | SOLVENT RESISTANT | UV RESISTANT

CE | UK CA | Reach | RoHS | CB | III

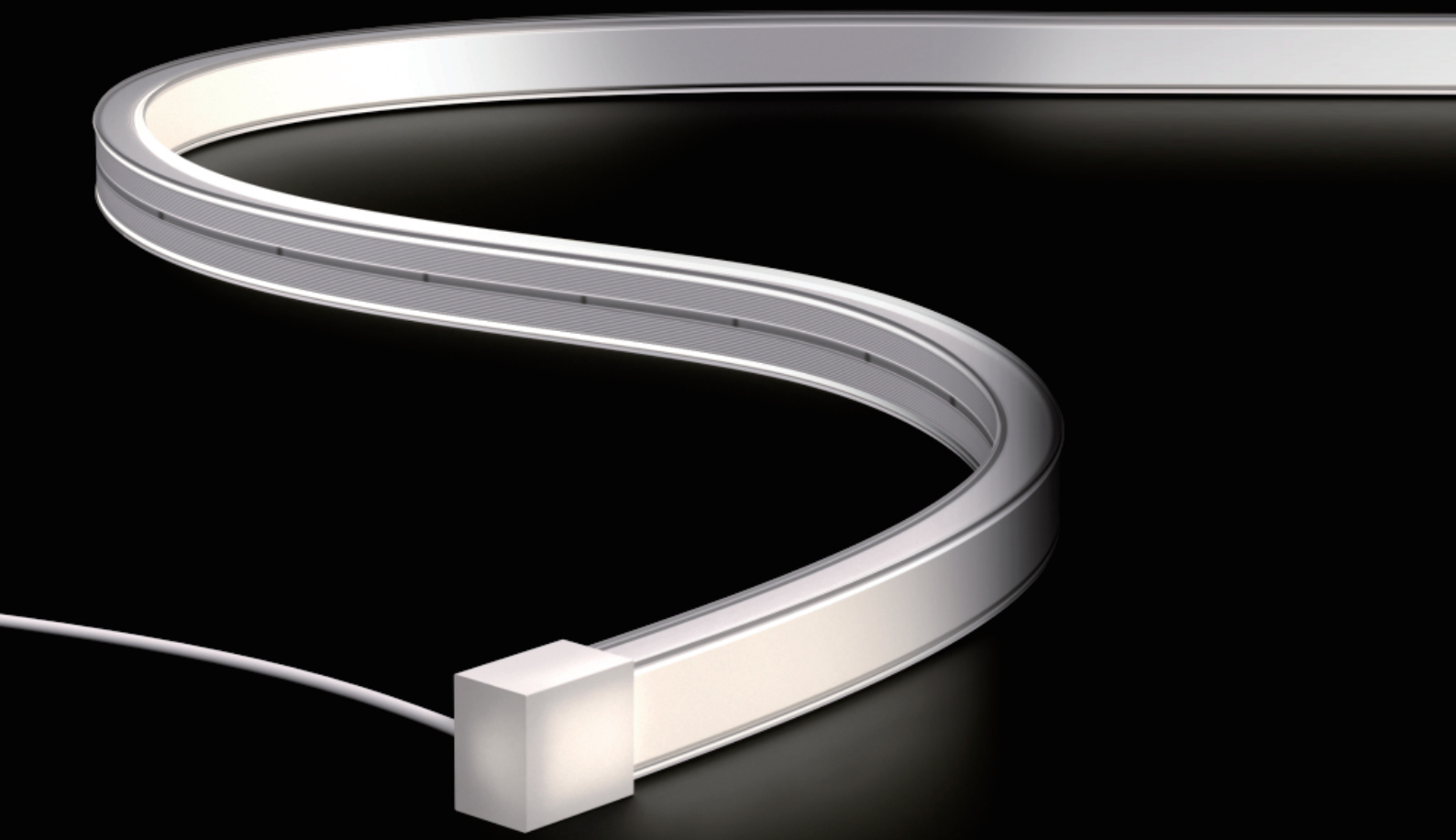

E-mail:colors@colorsled.com

Version：A00

www.colorsled.com

【Optical Features】

- **Light source:** High reliability light source；
- **Structure**： The lamp body shell is made of environmentally friendly, high-strength special materials;
- **Optical design:** unique optical light distribution structure design, uniform light emission on the surface without shadows;
- **Environmental characteristics:** salt resistance, acid and alkali corrosion resistance, resistant to active chlorine in the pool, UV resistance；
  (Chlorine Resistances < 10ppm* ,Salt Resistance < 4%)
- **Working/storage temperature:** Ta: -20~50℃ / 0℃～60℃；
- **Product application:** swimming pool lighting;
- **5 years warranty or working life =60000H,whichever comes first.**
- **Warm Tips:**
  Do not connect underwater, unless there is a special underwater IP68 waterproof junction box with underwater certification.
  Do not remove water-blocking stopper. Unauthorized removal voids after-sales service.

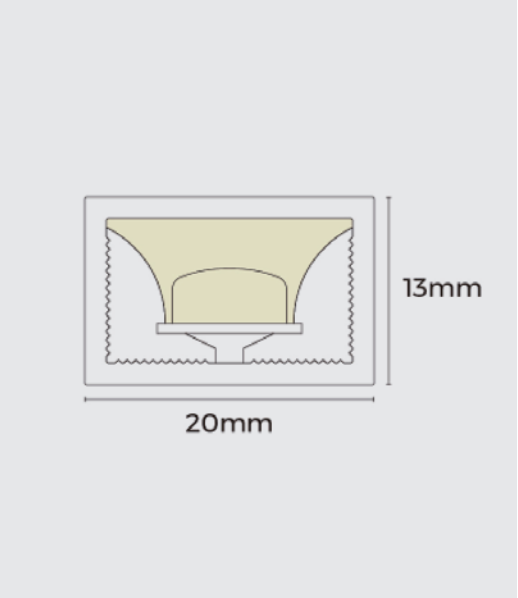

G B RGB RGBW DMX DMX DMX

2700K 3000K 4000K 6500K

* 《ANSI/APSP/ICC-11》: Free available chlorine concentration range: 1.0–3.0 ppm
* 《EN 15288-1:2018 and EN 15288-2:2018》: Free available chlorine concentration range: 0.3–1.5 ppm

【Basic Parameters】

White - 24V

Model	CCT/colors	Color Temperature Range	CRI	Input voltage (V)	Rated current (A/m)	Rated power (W/m)	Maximum power (W/m)	Lumens (LM/m)	Standard Length	Remark
AWT2013-9XW24 CSU200CC1000 -GV10-ENP-ESD	2700K	2600-2830K	>90	24	0.417 (0.127A/ft)	10 (3.05W/ft)	11 (3.35W/ft)	584 (178LM/ft)	10000mm (32.8ft)	16LED/50mm
	3000K	2920-3170K						620 (189LM/ft)		
	4000K	3770-4220K						666 (203LM/ft)		
	6500K	5800-6800K						735 (224LM/ft)		

Color Light - 24V

Model	CCT/colors	Color Temperature Range	CRI	Input voltage (V)	Rated current (A/m)	Rated power (W/m)	Maximum power (W/m)	Lumens (LM/m)	Standard Length	Remark
AWT2013-0X24 CSU200CC1000 -GV10-ENP-ESD	G	/	/	24	0.417 (0.127A/ft)	10 (3.05W/ft)	11 (3.35W/ft)	740 (225LM/ft)	10000mm (32.8ft)	16LED/50mm
	B							340 (103LM/ft)		
AWT2013-0RGB24 CSU200CC1000 -GV10-ENP-ESD	RGB	/	/	24	0.21 (0.06A/ft)	5 (1.52W/ft)	5.5 (1.67W/ft)	70 (21LM/ft)	10000mm (32.8ft)	18LED/50mm
AWT2013-0RGBXW24 CSU200CC1000 -GV10-ENP-ESD	2700K	RGB+(2550-2800K)	>90	24	0.21 (0.06A/ft)	5 (1.52W/ft)	5.5 (1.67W/ft)	200 (61 LM/ft)	10000mm (32.8ft)	7*4LED/83.3mm
	3000K	RGB+(2800-3200K)						230 (70LM/ft)		
	4000K	RGB+(3900-4350K)						230 (70LM/ft)		

DMX-White - 24V

Model	CCT/colors	Color Temperature Range	CRI	Input voltage (V)	Rated current (A/m)	Rated power (W/m)	Maximum power (W/m)	Lumens (LM/m)	Standard Length	Remark
AWT2013-9XWM24 CSU200CC1000 -GV10-ENP-ESD	2700K	2550-2800K	>90	24	0.21 (0.06A/ft)	5 (1.52W/ft)	5.5 (1.67W/ft)	75 (23 LM/ft)	10000mm (32.8ft)	7*3LED/83.3mm DMX-IC: UCS512H4LB 12 Pixels/m
	3000K	2800-3200K						85 (26 LM/ft)		
	4000K	3900-4350K						85 (26 LM/ft)		

DMX - RGB/RGBW - 24V

Model	CCT/colors	Color Temperature Range	CRI	Input voltage (V)	Rated current (A/m)	Rated power (W/m)	Maximum power (W/m)	Lumens (LM/m)	Standard Length	Remark
AWT2013-0RGB24 CSU200CC1000 -GV10-ENP-ESD	RGB	/	/	24	0.21 (0.06A/ft)	5 (1.52W/ft)	5.5 (1.67W/ft)	55 (17LM/ft)	10000mm (32.8ft)	7*3LED/83.3mm DMX-IC: UCS512H4LB 12 Pixels/m
AWT2013-0RGBXWM24 CSU200CC1000 -GV10-ENP-ESD	RGB+2700K	RGB+(2550-2800K)	>90	24	0.21 (0.06A/ft)	5 (1.52W/ft)	5.5 (1.67W/ft)	70 (21 LM/ft)	10000mm (32.8ft)	7*4LED/83.3mm DMX-IC: UCS512H4LB 12 Pixels/m
	RGB+3000K	RGB+(2900-3250K)						85 (26LM/ft)		
	RGB+4000K	RGB+(3900-4350K)						85 (26LM/ft)		

Note:
1、The above data is the testing result of 1M standard product;
2、The luminous flux is allowed to have an error range of -15%~+∞;
3、The above parameters are all typical values.

【Light Distribution】

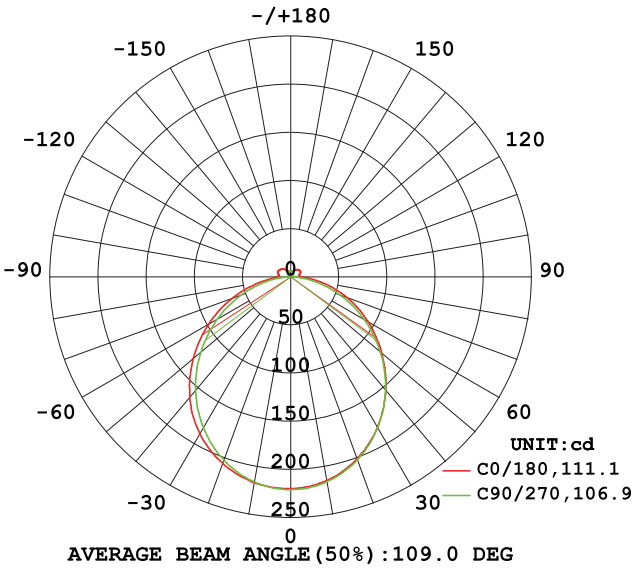

Light distribution

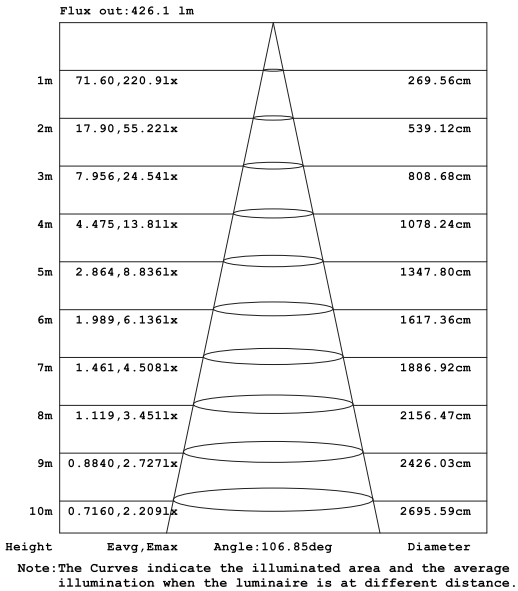

Effective average illuminance

Note: The above data is based on 24V monochrome 4000K color temperature. If you need other models of IES files, please download the corresponding models from the IES database.

【Product mechanical parameters】

EP(TPU):

IP68

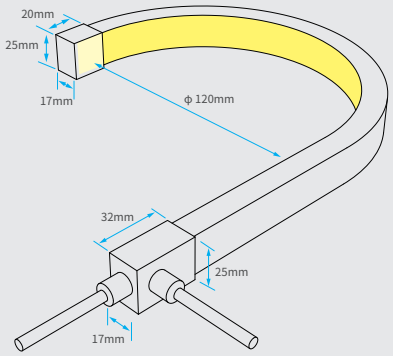

When splicing the product head, a minimum gap must be reserved for the profiles.

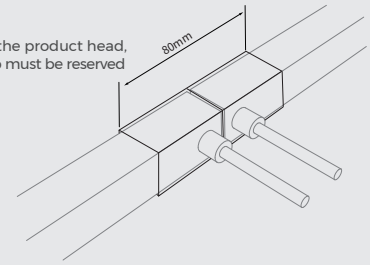

When splicing the product tail, a minimum gap must be reserved for the profiles.

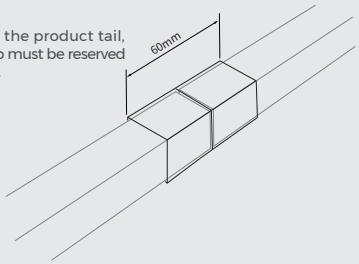

【Accessory information】

PC Clip

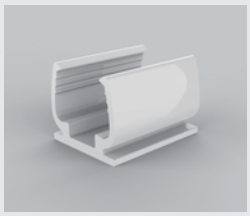

Model: AS-AWT2013P-30 **Screw Model:** KA-M4

Size: 30x23x20mm **Screw QTY:** 1 PCS

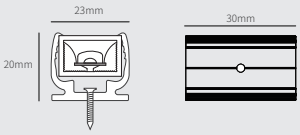

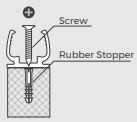

Cement Brick Wall

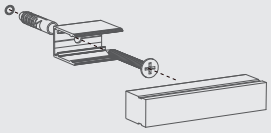

PC Groove

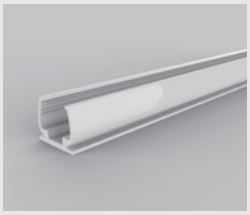

Model: AS-AWT2013P-950 **Screw Model:** KA-M4

Size: 950x23x20mm **Screw QTY:** 3 PCS

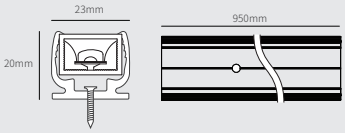

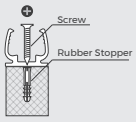

Cement Brick Wall

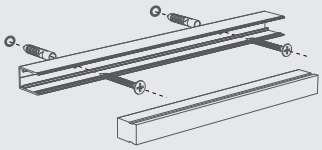

【Product Wiring Schematic】

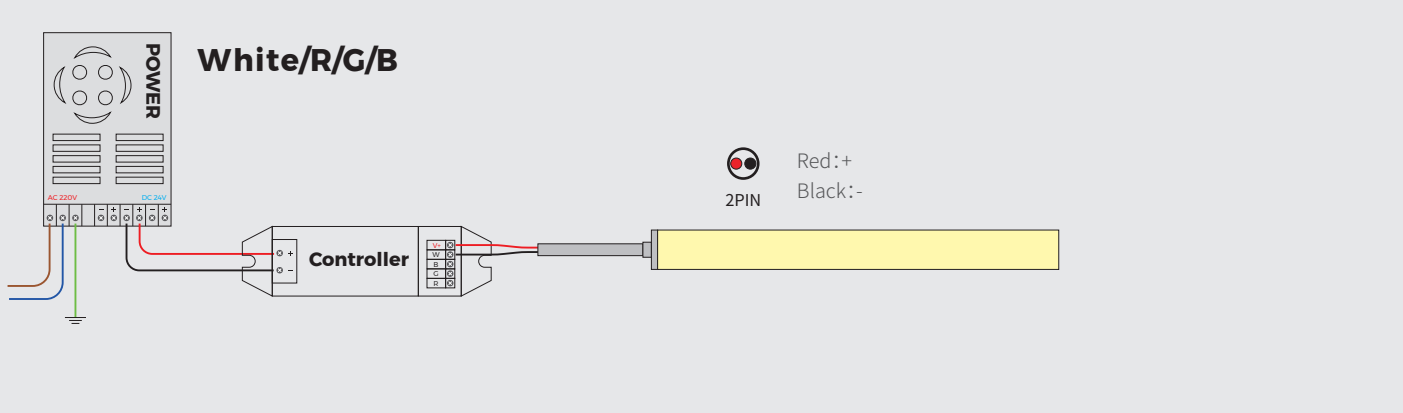

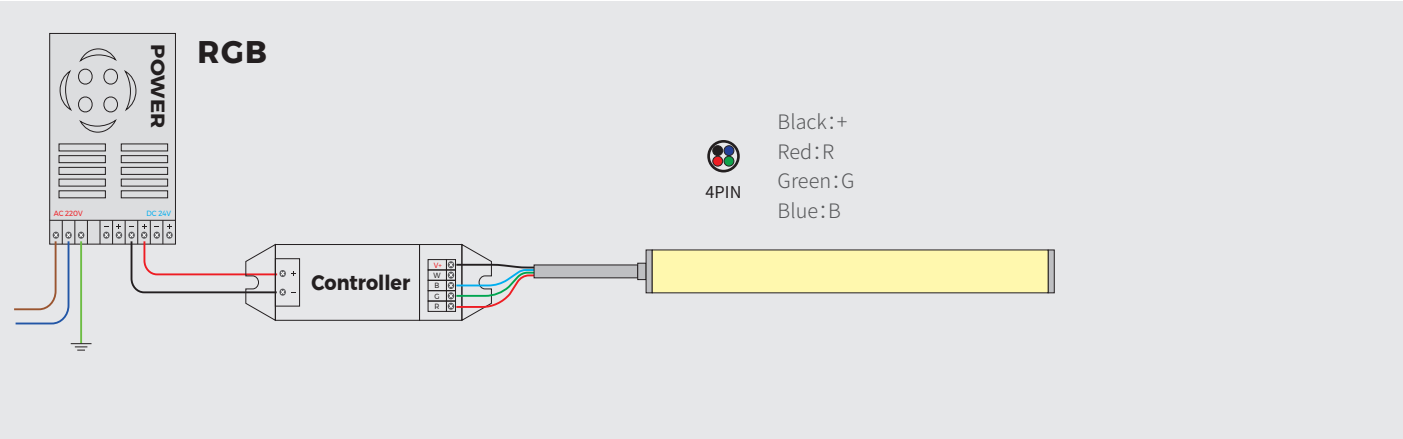

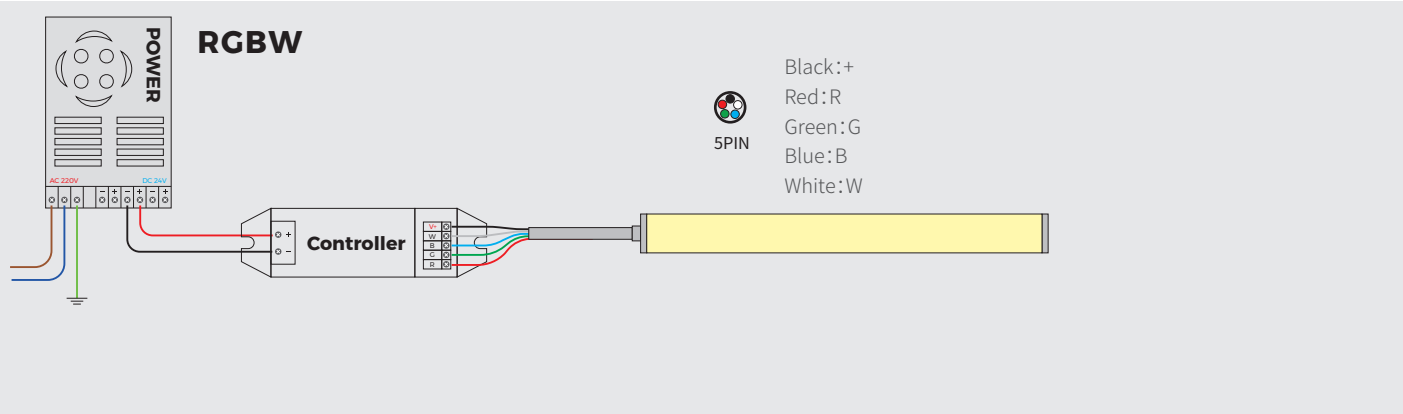

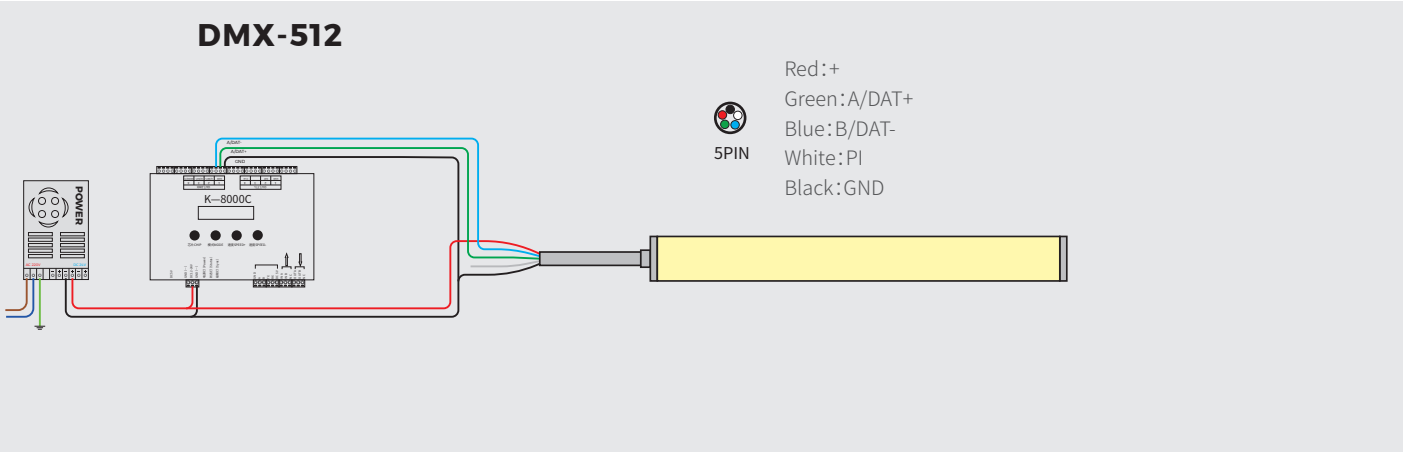

* For water-exposed scenarios, it is recommended to incorporate IP68-rated junction boxes!

【Packing information】

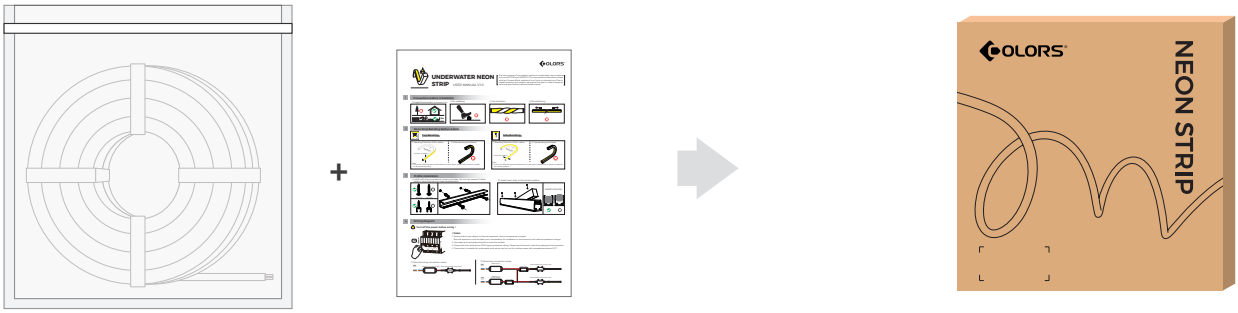

Type	Model	Product size	Product Quantity/ box	Product Quantity/ case	Product net weight (kg)	Net weight per box (kg)	Gross weight (kg)	Carton size (m)
Under Water Neon	AWT2013-5m	5000*20*13mm	10M	30M	1.6Kg	9.6Kg	11.8Kg	0.48*0.48*0.23
	AWT2013-10m	10000*20*13mm	10M	60M	3.2Kg	19.2Kg	21.5Kg	

【 Warranty and After-sales Service 】

Product Warranty Statement

Thank you for choosing COLORS products. In order to protect your rights, enhance product experience, and improve service quality, we have established the following “Product Warranty Statement”. This statement applies to all LED strips and neon strips produced by COLORS.

I. Warranty Commitment

COLORS solemnly promises that for products that meet the following warranty conditions and are within the warranty period, we will provide a “new-for-old” service, which means replacing products with the following faults:

1.Functional Faults: The light source fails to work normally (due to materials or craftsmanship resulting in the inability to illuminate).

2.Cosmetic Faults: Severe cosmetic issues of the product itself when it has been unsealed but not used.

II. Warranty Exclusions

The following are not covered by the warranty:

1.Light color coordinate drift (shift), luminous flux degradation, and changes in product appearance and color caused by long-term continuous use.

2.Faults caused by incorrect use, installation, or modification by the user.

3.Applications in mines, special equipment, and other specialized lighting fields without sufficient communication with our company.

III. Additional Terms of Warranty Service

1.Products applying for warranty service should be installed and used normally, and their configuration must be consistent with that at the time of factory shipment.

2.Users must follow the installation instructions and product specifications provided by COLORS to ensure that the product is used reasonably in the appropriate temperature and application environment.

3.COLORS's warranty products are only suitable for general lighting and decorative lighting applications.
4.COLORS will only bear the "new-for-old" service for products that meet the conditions and will not cover any related logistics, labor costs, or any other direct or indirect expenses.
5.COLORS ensures that the replacement new products meet or exceed the performance and specifications of the original products and reserves the right of final interpretation.
6.For the warranty terms applicable to other agreed usage scenarios, please refer to the company's contract for details.

Please keep this statement properly for use as a reference for warranty services when needed. If you have any questions, please feel free to contact us. Thank you for your support and trust!

【 Reliability Testing 】

test item	Classification	Reference	Test method or condition
Safety test	Mechanical strength	IEC 60598-1; IEC 60598-2-21	The hammer spring Impact energy 0.7J
	IP	IEC 60598-1; IEC 60598-2-21	IP67
	Winding Test	IEC 60598-1; IEC 60598-2-21	ϕ150mm cylinder, 60N pull, winding 10 times at (-25 °C±2°C) , and 10 times after(-15°C±2°C, 16h).
	Cold Bend Test	IEC 60598-1; IEC 60598-2-21	wound on mandrel, low-temperature (-15°C±2°C, 16h), around the mandrel for two turns
	Cold Impact test	IEC 60598-1; IEC 60598-2-21	Low-temperature (-15°C±5°C, 16h), hammer falls from a height of 100mm.
	Insulation Resistance	IEC 60598-1; IEC 60598-2-21	≦ 2MΩ
	Electrical strength	IEC 60598-1; IEC 60598-2-21	500V
Mechanical reliability testing	Bending test	Colors	Each 200mm, bending up and down 100 times
	Bending test	Colors	Each 200mm, bending left and right 100 times
	Torsion test	Colors	Twist clockwise 5 times and then release, repeat 200 times
	Disassembly and assembly test	Colors	Repeat disassembly and assembly, 10 times
Environment Reliability testing	High temperature storing test	IEC 60068-2-2	80°C, 168h
	Low temperature storing test	IEC 60068-2-1	-40°C, 168h
	High temperature and Humidity impact	IEC 60068-2-78	60°C, 85%RH
	Salt Spray test	IEC 60068-2-11	5% salt solution concentration, 24h
	IK	IEC 62262	5 times of impact on each exposed surface
	Lifetime aging test	Colors	35°C, 6000h
	switch test	Colors	10s On, 10s Off, 10000 times

【 Notes 】

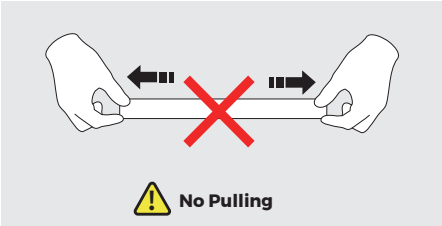

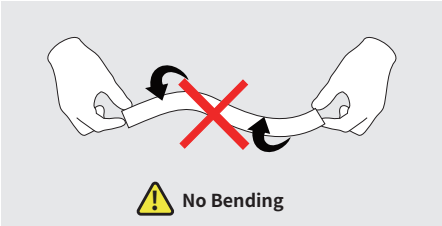

1. Safe Electricity Use

1. Non-professionals are prohibited from installing or disassembling the light strips.
2. Ensure the driver's voltage matches the product to avoid overload or short circuit.
3. The IP68 wiring system that comes with the product must be selected to prevent electric leakage.
4. Use an isolated power supply to drive the LED light strips. The ripple of the constant voltage source must be less than 5%. Capacitor-drop, non-isolated, or similar types of power supplies are not allowed.
5. In practical applications, the power supply should have a 20% margin (it is recommended to use only 80% of its power) to ensure sufficient voltage for driving the product.
6. Operate with caution. Do not touch the AC power terminals when the power is on to prevent electric shock.
7. Pay attention to the positive and negative poles of the power cord; do not connect them incorrectly. Verify that the voltage of the power supply matches the product to avoid product damage.

2. Installation Environment

1. For swimming pools, fountain pools and water features:
   Active chlorine concentration shall be < 10 ppm, and salt concentration shall be < 4%
   * 《ANSI/APSP/ICC-11》: Free available chlorine concentration range: 1.0–3.0 ppm
   * 《EN 15288-1:2018 and EN 15288-2:2018》: Free available chlorine concentration range: 0.3–1.5 ppm
2. Avoid high-temperature environments (e.g., near heaters and fire sources) and areas with corrosive gas or liquid.

3. Installation Precautions

1. Do not connect underwater, unless there is a special underwater IP68 waterproof junction box with underwater certification.
2. Do not remove water-blocking stopper. Unauthorized removal voids after-sales service.
3. Use dedicated profiles or clips for fixation; avoid bending or pulling the wires.
4. Ensure firm contact during wiring to prevent faults caused by poor connections.
5. During installation, avoid scratching, twisting, or irregularly bending the product, as this may cause irreparable damage.
6. To ensure the light strip's lifespan and reliability, do not bend it beyond the minimum bending radius. An exces sively small bending radius will damage the product.
7. If the actual application length exceeds the specified usable length, the light strip may experience overload, overheating, or uneven brightness.
8. Do not use any acidic or alkaline adhesives (including but not limited to glass glue) to fix the product.
9. Due to structural differences, products of different sizes may have slight color deviations under the same color temperature. Confirm this before use.
10. Products with IP68 protection cannot be cut or processed by yourself.
11. For unwinding and placing engineering-packaged neon products during construction, use a pay-off stand to avoid damage from pulling forces.
12. During construction and installation, do not use adhesives (e.g., 502/705) that react with silicone. Silicone sealant is recommended for bonding.
13. For underwater power connection of pool neon products or connection between two product lead wires, use certified or tested professional IP68 waterproof junction boxes with proper installation.
14. Power drivers and control devices for pool neon lights shall be kept away from water sources to prevent malfunction of the drive and control system.

4. Usage and Maintenance

1. Disconnect the power supply when the product is not in use for a long time to extend its lifespan.
2. Ensure proper sealing for products stored long-term or remaining after cutting; avoid exposure to organic environments containing aldehydes/benzenes.
3. To protect eyesight, avoid staring at the light-emitting surface of the lit light strip for a long time.
4. When installing and using the product, ensure the entire product is in the same environmental conditions to prevent uneven color changes of the product's colloid caused by different exposure levels or environmental differences.

5. Environmental Handling

1. Discarded light strips must be recycled in accordance with e-waste regulations; do not discard them randomly.
2. When replacing light strips, prioritize degradable or energy-saving products.

6. Other Statements

1. For mass production, 1-2 splices per 5 meters are allowed.
2. Due to material characteristics, slight color change of the product appearance after long-term use is normal.
3. When using dimmers (e.g., Triac) and dimming power supplies with the product, conduct compatibility tests between the product, dimmer, and dimming power supply to ensure full adaptation. For any issues, please contact COLORS for professional technical support.